PRODUCT SHEET

Description:
Rim Lock 852, ø19x22mm (Slim Case), Nickel Plated, HCK SISO

Item number:
14.01.102-0

Units	Box	Carton	HS Code	Barcode
Pcs.	12	240	8301300000	5704866032889

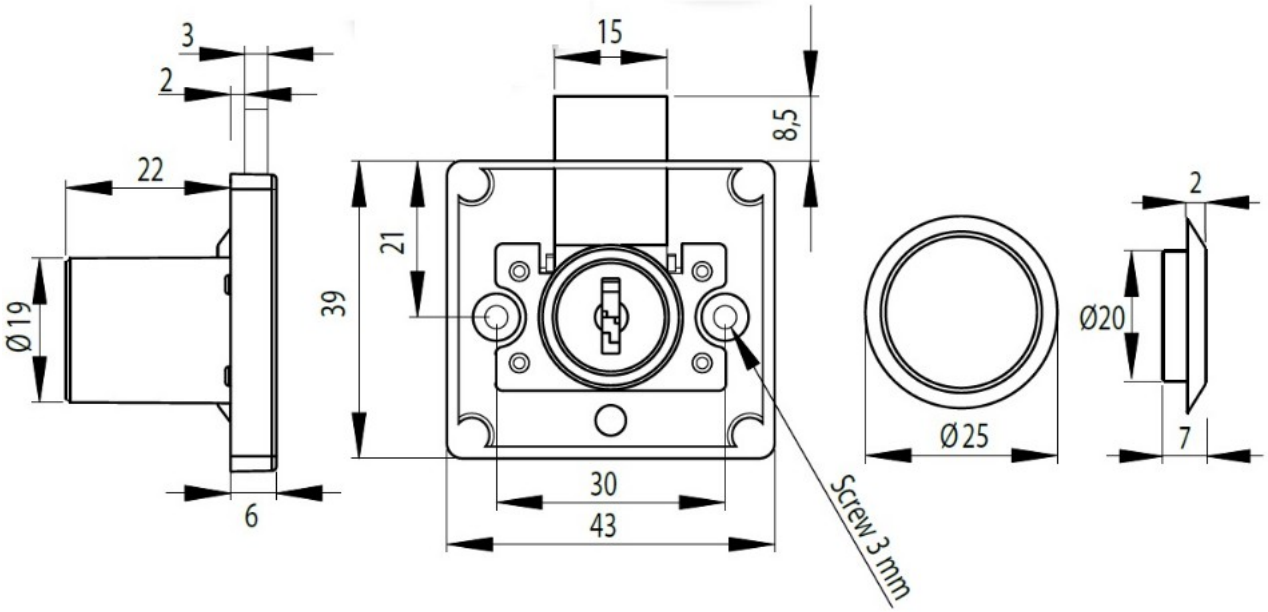

SISO A/S
Mileparken 11
DK-2740 Skovlunde
Denmark
VAT: DK 24786013

Phone +45 45 830 900

www.siso.dk
siso@siso.dk

Danske Bank
Nytorv Branch
Copenhagen
SWIFT: DABADKKK

Account no.
4180 3112 112936
IBAN Account
DK7230003112112936